Exploring Digital Learning Acceptance: An Extended TAM Perspective on System Quality and Student Behaviour in e- Learning Platform

Anggraeni Widya Purwita[1*], *Ghea Sekar* Palupi[1], *Rahadian* Bisma[1], *Aries Dwi* Indriyanti[1], *Sri* Suryanti[2], *Afifah* Rahmaningrum[3], and *Muhammad Nurul* Ashar[4,5]

[1]Department of Information Systems, Faculty of Engineering, Universitas Negeri Surabaya, 60231 Surabaya, Indonesia
[2]Department of Mathematics Education, Faculty of Mathematics and Natural Science, Universitas Negeri Surabaya, 60231 Surabaya, Indonesia
[3]Department of Early Childhood Education Teacher Education, Faculty of Education, Universitas Negeri Surabaya, 60231 Surabaya, Indonesia
[4]Department of Special Education, Faculty of Education, Universitas Negeri Surabaya, 60231 Surabaya, Indonesia
[5]School of Education and Social Works, Faculty of Arts and Social Sciences, University of Sydney, 2006 Sydney, Australia

Abstract. The rapid transition to online learning in the post-pandemic period has compelled Indonesian higher education institutions to develop proprietary e-learning platforms. Adoption of these methods by students is still uneven, though. The factors that influence students' acceptance of Sidia (Sinau Digital), an institutional learning platform created by Universitas Negeri Surabaya, are examined in this study. The System Quality element from the DeLone and McLean IS Success Model was incorporated into an enhanced TAM. A Likert-scale survey was used to gather information from 409 undergraduate students, and PLS-SEM was used for analysis. The results show that PEOU ($\beta = 0.765$) and PU ($\beta = 0.466$), which in turn affect ATU and BIU, are highly influenced by System Quality. Furthermore, BIU was found to be a strong predictor of ASU ($\beta = 0.628$).These results validate the extended TAM model and highlight the importance of technical aspects—such as system stability, navigability, and responsiveness—in driving user acceptance. The study provides practical insights for institutions developing LMS platforms and offers a theoretical extension by demonstrating the mediating role of system quality in digital learning adoption.

* Corresponding author: anggraenipurwita@unesa.ac.id

© The Authors, published by EDP Sciences. This is an open access article distributed under the terms of the Creative Commons Attribution License 4.0 (https://creativecommons.org/licenses/by/4.0/).

1 Introduction

Changes in the global higher education landscape are encouraging institutions to continue innovation in the delivery of learning, including using e-learning systems. The utilization of online learning platforms is a crucial tactic for reaching students broadly In addition to reflecting the demand for flexibility in the learning process, the use of online learning platforms is an essential strategy for reaching students widely and sustainably. In this regard, the use of Learning Management Systems (LMS) has become a crucial component of the digital revolution of education in a number of developing nations, notably those in Southeast Asia [1]. However, a typical barrier to the use of e-learning technology in higher education is user acceptance. Numerous studies demonstrate that pupils' optimal use of technology is not always ensured by its availability [2]. The Technology Acceptance Model (TAM) is the most widely used theoretical framework for describing how users behave when using digital technology. Perceived Usefulness (PU) and Perceived Ease of Use (PEOU) have a significant impact on behavior intention to use and actual system use, according to TAM [3, 4]. However, TAM hasn't taken consideration the technological aspects of the system, such as its dependability, speed, stability, and ease of use. Researchers developed an expanded TAM by adding the System Quality construct from the IS Success Model [5] to give a more comprehensive view of the technical factors influencing system adoption. [6, 7]. In a variety of educational contexts, including the post-pandemic era, where the use of digital technologies has become an ongoing need, this integration has shown pertinent in describing how students behave toward learning management systems [7].

Many Indonesian universities have created their own learning management system (LMS) platforms to satisfy certain institutional requirements. One such portal is Universitas Negeri Surabaya's (Unesa) e-learning platform, Sidia (Sinau Digital). The purpose of Sidia was to support both synchronous and asynchronous courses. Synchronous lectures, asynchronous lectures, RPS OBE, Spada Indonesia, and the Siakadu Academic System are all connected with Sidia Unesa [8]. Although the functionality and accessibility of the platform have been constantly improved, field implementation shows variations in the degree of acceptability and actual use by students. This raises concerns about the factors influencing students' adoption of internal learning platforms such as Sidia. The study is to examine technological acceptability in the use of Sidia using an improved TAM model that incorporates the System Quality component. Using a quantitative approach based on Partial Least Squares Structural Equation Modeling (PLS-SEM), this study examines the relationships between System Quality, Perceived East of Use (PEOU), Perceived Usefulness (PU), Attitude Toward Using (ATU), Behaviour Intention to Use (BIU), and Actual System Use (ASU).

2 Literature Review

One of the most popular theoretical models for describing how people embrace technology is the Technology Acceptance Model (TAM), which was created by [3]. In many digital system contexts, including e-learning, it has been empirically demonstrated that the two primary TAM components, perceived usefulness (PU) and perceived ease of

use (PEOU), affect attitude toward using (ATU), behavior intention to use (BIU), and actual system use (ASU) [4]. The primary drawback of TAM, however, is its incapacity to capture the technical aspects of the system in use, such as speed, stability, and ease of navigation, which in reality have a big impact on users' attitudes and actions. The information system success model created by [5] include the System Quality (SQ) construct, which refers to users' opinions of the system's technical quality, including its performance, dependability, and usability. According to earlier studies, SQ significantly affects PU and PEOU and supports the model's hypotheses on the adoption of institutional e-learning systems [6, 7]. Thus, this study suggests that students' perceptions of the usefulness (PU) (H1) and ease of use (PEOU) (H2) will be influenced by their perceptions of the system quality. Numerous research have confirmed the connection between PEOU and PU as a key relationship in TAM. Systems that are probably simple to utilize perceived as more useful because they reduce technical and cognitive barriers in the usage process [4], so PEOU influences PU (H3). Students who believe the system is useful and simple to use are more likely to develop favourable opinions about using it [9], so it is proposed that PU (H4) and PEOU (H5) influence ATU. The attitudes formed then become an important foundation in shaping behavioural intention (BIU), as found by [10] that attitudes are a strong mediator between perception and intention. Therefore, it is formulated that PU (H6) and ATU (H7) influence BIU. Finally, Behaviour Intention to Use is though a direct determinant of Actual System Use (ASU), as emphasised by [11] in the context of institutional LMS, where intention has a significant relationship with the frequency and depth of user interaction with the system. Based on this, it is hypothesised that Behaviour Intention to Use (BIU) influences Actual System Use (ASU) (H8).

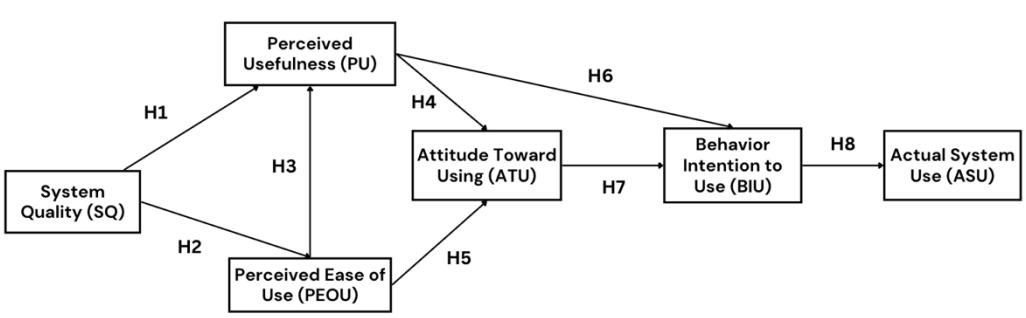

Fig. 1. Conceptual Model

3 Methodology

3.1 Research Design

This study adopts a quantitative explanatory design to examine causal relationships among latent variables in the TAM framework [3]. This research model is expanded by adding the System Quality construct [5] to capture contextual aspects in the acceptance of the Sidia platform.

3.2 Population and Sampling Technique

All enrolled undergraduate students at Universitas Negeri Surabaya (Unesa) who have utilized the Sidia platform for their coursework comprised the study's population. Purposive sampling was the method employed, and the inclusion criteria were as follows: (1) Current undergraduate students and (2) had used Sidia for at least one semester. Partial Least Squares Structural Equation Modelling (PLS-SEM) analysis was used to establish the sample size; the minimum sample size was ten times the number of indicators [12]. With the largest construct consisting of 24 indicators, the minimum sample size was 240. However, to improve the stability and strength of the model, this study successfully collected 409 valid respondents.

3.3 Data Collection

An online structured questionnaire derived from the Technology Acceptance Model [3] and other System Quality constructs modified from DeLone and McLean [5] was used to gather data. System quality, perceived usefulness, perceived ease of use, attitude toward using, behaviour intention to use, and actual system use are the six constructs that make up the model. There are 24 questions in all, and 3 to 5 indicators are used to measure each construct. A 5-point Likert scale, with 1 indicating "strongly disagree" and 5 indicating "strongly agree," is used to measure each item.

3.4 Data Analysis

A Partial Least Squares-based Structural Equation Modeling (PLS-SEM) technique using SmartPLS 4 tools was used to analyze the study's data. Evaluation of the measurement model and the structural model were the two phases of the investigation [12]. Measurement model evaluation included convergent validity tests (outer loading > 0.70 and AVE > 0.50), construct reliability (Composite Reliability and Cronbach's Alpha > 0.70), and discriminant validity using the Fornell-Larcker criteria and HTMT < 0.90. Furthermore, the structural model was tested to assess the relationships between constructs through R^2 and f^2 analysis, and path significance testing. Hypothesis testing was conducted using the bootstrapping method, with significance criteria determined based on t-statistics > 1.96 and p-value < 0.05. This testing was used to confirm the influence between variables in the conceptual model that had been constructed based on the theoretical framework.

4 Result and Discussion

4.1 Result

4.1.1 Demographic Respondent

This study involved 409 student respondents selected through purposive sampling, a non-probabilistic sampling method that considers specific characteristics in accordance with

the research objectives. In this context, respondents were selected based on their status as active Unesa students with experience in using Sidia. Demographically, the respondents were female (67%), while males accounted for 33% of the total sample. In terms of age range, most respondents were in the 19–20 age group (71%), followed by the 21–22 age group (17%), 17–18 age group (11%), and 22–24 age group (1%). Based on faculty affiliation, respondents were predominantly students from the Faculty of Engineering (52%), followed by Campus 5 (17%), and other faculties such as FIP (5%), FBS, FIKK, FISIPOL, and FMIPA each at 4%, FEB and Psychology (3%), and FH and Vocational (2%).The detailed demographic data in Table 1.

Table 1. Respondent Demographic Information

Respondent Demographic (N=409)		**Frequency**	**Percentage (%)**
Gender	Male	133	33%
	Female	276	67%
Age	17-18	46	11%
	19-20	289	71%
	21-22	68	17%
	22-24	6	1%
Faculty	FEB	11	3%
	FBS	16	4%
	FH	10	2%
	FIKK	15	4%
	FIP	19	5%
	FISIPOL	15	4%
	FMIPA	18	4%
	FT	211	52%
	PSYCHOLOGY	13	3%
	VOCATION	10	2%
	CAMPUS 5	71	17%

4.1.2 Measurement Model Assessment

The outer loading analysis's findings indicate that the majority of the model's indicators have strong convergent validity, with values over 0.70, as indicated by [12], particularly in the constructs of PEOU, PU, and BIU, which have strong and consistent loading values. However, there are some indicators that do not meet the criteria, such as ASU1 (–0.845) and ASU5 (–0.771), which show negative values in the Actual System Use construct, ATU1 (0.507) and ATU4 (–0.903) in ATU construct, and SQ3 (0.236) in SQ construct, all of which are below the minimum threshold and can significantly reduce the reliability and validity of the construct. Therefore, these indicators will be eliminated from the model to ensure measurement accuracy and improve the overall quality of the structural model. The detailed can be seen in Table 2.

Table 2. Result of Outer Loading

Construct	**Outer loadings**
ASU1 <- ASU	-0.845
ASU2 <- ASU	0.794

Construct	Outer loadings
ASU3 <- ASU	0.808
ASU4 <- ASU	0.819
ASU5 <- ASU	-0.771
ATU1 <- ATU	0.507
ATU2 <- ATU	0.811
ATU3 <- ATU	0.910
ATU4 <- ATU	-0.903
BIU1 <- BIU	0.780
BIU2 <- BIU	0.894
BIU3 <- BIU	0.855
PEOU1 <- PEOU	0.852
PEOU2 <- PEOU	0.879
PEOU3 <- PEOU	0.895
PEOU4 <- PEOU	0.822
PU1 <- PU	0.909
PU2 <- PU	0.884
PU3 <- PU	0.895
PU4 <- PU	0.856
SQ1 <- SQ	0.860
SQ2 <- SQ	0.864
SQ3 <- SQ	0.236
SQ4 <- SQ	0.764

All construct' Cronbach's Alpha scores were higher than the 0.70, indicating good internal consistency among items in each construct [12]. The highest value was found in PU at 0.909, while the lowest value was still acceptable at SQ at 0.777. In addition, the Composite Reliability (rho_c) values are also very good, ranging from 0.871 to 0.936, indicating that the indicators within each construct collectively represent the latent variables reliably. Furthermore, all constructs also show Average Variance Extracted (AVE) values above 0.50, indicating the fulfilment of convergent validity. The highest AVE was found in the ATU construct at 0.823, while the SQ construct had an AVE of 0.694, which is still above the minimum threshold. Thus, it can be concluded that all constructs in this model have demonstrated strong validity and reliability.

Table 3. Result of Cronbach's Alpha, CR, and AVE

	Cronbach's alpha	Composite reliability (rho_a)	Composite reliability (rho_c)	Average variance extracted (AVE)
ASU	0.805	0.810	0.885	0.720
ATU	0.786	0.798	0.903	0.823
BIU	0.798	0.806	0.881	0.713
PEOU	0.885	0.886	0.921	0.744
PU	0.909	0.910	0.936	0.785
SQ	0.777	0.781	0.871	0.694

Table 4. Result of Fornell-Larcker

	ASU	ATU	BIU	PEOU	PU	SQ
ASU	0.848					
ATU	0.656	0.907				
BIU	0.628	0.589	0.844			
PEOU	0.761	0.674	0.579	0.863		
PU	0.706	0.650	0.667	0.707	0.886	
SQ	0.658	0.648	0.602	0.765	0.734	0.833

In the Table 4. the square root of the Average Variance Extracted (AVE) value for each construct is displayed in the diagonal (bold), and must be greater than the correlation between that construct and other constructs in the same column or row [12]. For example, the AVE value for the ASU construct is 0.848, which is greater than its correlation with other constructs such as ATU (0.656), PEOU (0.761), or SQ (0.658). The same applies to other constructs: PU has an AVE root of 0.886, which is higher than its highest correlation with other constructs (i.e., 0.734 with SQ). These results indicate that each construct is more capable of explaining the variance of its own indicators than the variance shared with other constructs, thus confirming that discriminant validity has been achieved.

Based on the Table 5. The discriminant validity testing using HTMT (Heterotrait-Monotrait Ratio), all ratio values between constructs were below the maximum threshold of 0.90, indicating that the constructs in the model have adequate discriminant validity. The highest HTMT values were recorded between PEOU and SQ (0.921), as well as between ASU and PEOU (0.921), which are close to the critical threshold but still acceptable in the context of social research with theoretically related constructs. Meanwhile, other HTMT values, such as between ATU Using and BIU (0.735), and between SQ and BIU (0.760), indicate good discriminant relationships.

Table 5. Result of Heterotrait-Monotrait Ratio

	ASU	ATU	BIU	PEOU	PU	SQ
ASU						
ATU	0.824					
BIU	0.781	0.735				
PEOU	0.904	0.804	0.684			
PU	0.823	0.766	0.779	0.785		
SQ	0.834	0.826	0.760	0.921	0.873	

Table 6. Result of R^2

	R-square	R-square adjusted
ASU	0.394	0.393
ATU	0.515	0.512
BIU	0.486	0.484
PEOU	0.585	0.584
PU	0.590	0.588

PU construct has an R^2 value of 0.590, meaning that 59% of the variance in PU can be explained by the independent variables that influence it. PEOU and ATU each have R^2 values of 0.585 and 0.515, respectively, which also reflect substantial exogenous construct influences. Meanwhile, BIU has an R^2 value of 0.486 and ASU has an R^2 value of 0.394, both of which are still in the moderate category. The adjusted R-square values, which are very close to the R^2 values, indicate model stability and the absence of overfitting. Thus, overall, these results indicate that the structural model has good explanatory power for the dependent variables in the model.

Table 7. Result of F^2

	ASU	ATU	BIU	PEOU	PU	SQ
ASU						
ATU			0.081			
BIU	0.650					
PEOU		0.189			0.124	
PU		0.125	0.272			
SQ				1.409	0.220	

The largest f^2 value was found in the SQ pathway towards PEOU at 1.409, indicating a very strong influence and confirming that perceived ease is the main determinant in shaping the perceived benefits of digital learning systems, in line with the main assumption in the TAM model [3]. Additionally, the path from BIU to ASU also shows a significant effect ($f^2 = 0.650$), reinforcing that behavioural intention is a direct predictor of actual use, consistent with findings [12]. Moderate effects are observed in the PU → BIU path ($f^2 = 0.272$) and PEOU → ATU path ($f^2 = 0.189$), indicating that perceived ease of use also plays an important role in shaping intentions and attitudes toward system use. Meanwhile, the PU → ATU ($f^2 = 0.125$) and SQ → PU ($f^2 = 0.220$) paths contribute small to moderate, yet still significant, effects in the model structure. Overall, these f^2 values indicate that the model has good explanatory power, with the largest contribution coming from perceived ease of use in digital learning systems.

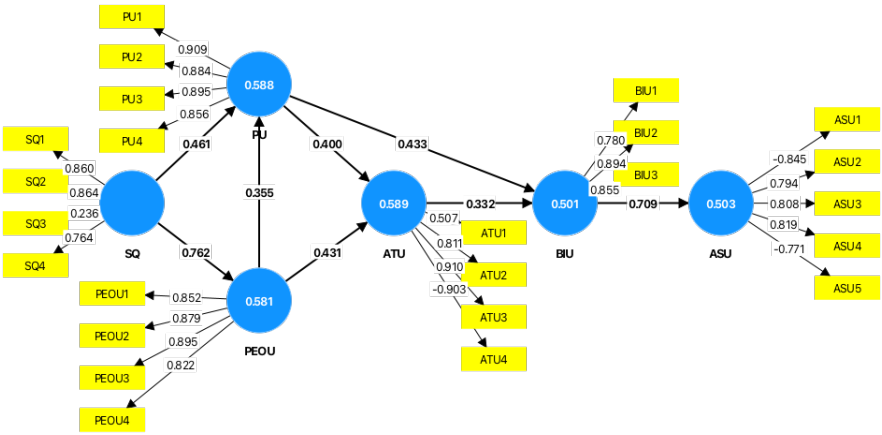

Fig. 2. Result of PLS-SEM Using SmartPLS 4

4.1.3 Hypotheses Testing

Based on the bootstrapping test results, all hypotheses were found to be significant at a significance level of 0.000, indicating that all hypotheses were accepted and had a significant effect – H1, System Quality (SQ) had a significant effect on Perceived Usefulness (PU) with (β = 0.466) (t = 8.992). H2 - SQ also has a significant effect on Perceived Ease of Use (PEOU) with (β = 0.765) (t = 32.018) and makes it the most dominant path in the model. H3 - which tests the influence of PEOU on PU, has a significant effect (β = 0.350; t = 6.251), supporting the main assumption in TAM that ease of use enhances perceived usefulness. Furthermore, H4 - shows that PU significantly influences Attitude Toward Using (ATU) with (β = 0.348) (t = 6.170). H5 - shows that PEOU also has a significant influence on ATU (β = 0.428; t = 6.950), indicating that users' attitudes toward the system are formed from cognitive perceptions of ease and benefits. Hypotheses H6 and H7, which test the influence of PU and ATU on Behavioural Intention to Use (BIU), are also found to have a significant influence, respectively with (β = 0.492) (t = 8.127) and (β = 0.269) (t = 4.237). Finally, H8 shows that BIU significantly influences Actual System Use (ASU) (β = 0.628) (t = 16.506), making behavioural intention the primary predictor of actual use. Thus, all hypotheses in the conceptual model are empirically supported and reflect strong theoretical relationships among variables in the context of acceptance of the Sidia digital learning system.

Table 8. Re sult of Hypotheses Test

	Original sample (O)	Sample mean (M)	Standard deviation (STDEV)	T statistics (|O/STDEV|)	P values
ATU -> BIU	0.269	0.271	0.063	4.237	0.000
BIU -> ASU	0.628	0.630	0.038	16.506	0.000
PEOU -> ATU	0.428	0.427	0.062	6.950	0.000
PEOU -> PU	0.350	0.348	0.056	6.251	0.000
PU -> ATU	0.348	0.349	0.056	6.170	0.000
PU -> BIU	0.492	0.491	0.061	8.127	0.000
SQ -> PEOU	0.765	0.765	0.024	32.018	0.000
SQ -> PU	0.466	0.469	0.052	8.992	0.000

4.2 Discussion

The test results show that System Quality has a significant influence on Perceived Usefulness (H1). This finding reinforces the information system success model [5] and [11], which shows that SQ can mediate the relationship between PEOU and PU. The results of this study are in line with those studies, which emphasise the role of system quality in influencing user satisfaction. Compared to the study by [14], which highlights the importance of service quality in the use of cloud-based systems in e-learning, this study emphasises that in a local context such as Sidia, it is the technical quality of the system (e.g., speed, stability, and responsiveness) that is a crucial factor in driving Perceived Usefulness. The significant influence of SQ reinforces the assumption that the technical quality of learning systems plays a strategic role in promoting user accessibility [15]. H2 confirms that system quality has a significant effect on PEOU, indicating that technical aspects of the system are not only related to performance but also create experiential fluency—that is, a feeling of smoothness and freedom from obstacles when interacting with the system. [7] states that ease of access, menu clarity, and interface navigation significantly enhance users' digital self-efficacy. This clarifies that system quality is not merely mechanical but also psychological, as it shapes users' perception of control over technology.

The relationship between PEOU and PU (H3) reaffirms the argument [3] that an easy-to-use system will encourage the perception that the system is suitable for use in a productive context. However, interestingly, this study shows that ease of use is no longer merely a direct predictor, but also a reinforcer of experiences that deepen perceptions of usefulness. This is in line with [4], which found that in modern e-learning systems, PU are shaped more by ongoing usage experiences than by the technical functions of the system alone. Stated differently, when a system is perceived as easy to use, it fosters deeper user engagement, which in turn reinforces perceptions of its long-term utility.

Both PU and PEOU exert a statistically significant influence on users' attitudinal responses attitude toward using (H4 and H5). This supports the findings [9] which show that attitudes are formed from a combination of functional (benefits) and emotional (ease of interaction) evaluations, which ultimately influence behavioural intentions. In fact, in the context of the evolving digital learning environment, [1] notes that PU no longer stands alone but depends on PEOU, which fosters confidence and control in the online environment.

Both ATU and PU were found to significantly predict BIU (H6 and H7). Interestingly, the influence of ATU in this study appears to be more contextually grounded, suggesting that students' affective evaluations of the Sidia platform are shaped not only by cognitive perceptions but also by institutional dynamics, such as university policies and prevailing patterns of online learning. This observation is consistent with prior findings [10], which argue that intention to use is driven not solely by perceived usefulness, but also by the perceived alignment of the system with users' academic expectations and learning contexts. Furthermore, the results (H8) that demonstrating that BIU serves as a strong and direct predictor of Actual System Use (ASU).This confirms the theoretical predictions of TAM and various other technology acceptance models that intention is the main proxy for actual behaviour. However, [11] warns that intention alone is not enough if it is not supported by a system that is accessible, supportive, and appropriate to the needs. In this case, Sidia is deemed to have met user expectations, given that the influence of intention on actual use is proven to be strong and significant.

5 Conclusion

System Quality emerges as a critical determinant in shaping students' perceptions of both PEOU and PU, which subsequently influence their ATU and BIU the Sidia platform. Furthermore, Behavioural Intention was empirically validated as a direct antecedent of Actual System Use. These findings affirm the robustness of the extended TAM and underscore the necessity of integrating technical dimensions into frameworks evaluating the adoption of digital learning technologies in higher education. Specifically, System Quality is reaffirmed as a salient extension variable in predicting user acceptance of institution-specific Learning Management Systems (LMS). From a practical standpoint, the results indicate that system developers and academic decision-makers should prioritise enhancements in technical performance—such as system stability, interface navigation, and response time—to strengthen students' perceptions and encourage consistent usage. This study employed a quantitative design with data limited to a single institutional setting; therefore, generalisability remains constrained. In order to produce a more thorough understanding of LMS adoption behavior in higher education, future research is encouraged to use longitudinal approaches across a variety of institutional contexts, taking into account potential moderating or mediating factors like prior digital experience, user satisfaction, or institutional support.

References

1. Al-Nuaimi, M.N., Al-Emran, M.: Learning management systems and technology acceptance models: A systematic review. Educ Inf Technol (Dordr). 26, 5499–5533 (2021). https://doi.org/10.1007/s10639-021-10513-3
2. Fearnley, M.R., Amora, J.T.: Learning Management System Adoption in Higher Education Using the Extended Technology Acceptance Model Volume 8 – Issue 2 IAFOR Journal of Education: Technology in Education Volume 8 – Issue 2 IAFOR Journal of Education: Technology in Education Volume 8 – Issue 2 IAFOR Journal of Education: Technology in Education Volume 8 – Issue 2 IAFOR Journal of Education: Technology in Education – Volume 8 – Issue 2.
3. Davis, F.D.: Perceived usefulness, perceived ease of use, and user acceptance of information technology. MIS Q. 13, 319 (1989). https://doi.org/10.2307/249008
4. Salloum, S.A., Alhamad, A.Q.M., Al-Emran, M., Monem, A.A., Shaalan, K.: Exploring Students' Acceptance of E-Learning Through the Development of a Comprehensive Technology Acceptance Model. IEEE Access. 7, 128445–128462 (2019). https://doi.org/10.1109/ACCESS.2019.2939467
5. William H. Delone, Ephraim R. McLean: The DeLone and McLean model of information systems success: A ten-year update. J Manag Inf Syst. 19, 9–30 (2003). https://doi.org/10.1080/07421222.2003.11045748
6. Nguyen, P.T., Nguyen, Q.L.H.T.T., Huynh, V.D.B., Nguyen, L.T.: E-learning Quality and the Learners' Choice Using Spherical Fuzzy Analytic Hierarchy Process Decision-making Approach. Vikalpa. 49, 143–156 (2024). https://doi.org/10.1177/02560909241255003
7. Prasetyo, Y.T., Ong, A.K.S., Concepcion, G.K.F., Navata, F.M.B., Robles, R.A. V., Tomagos, I.J.T., Young, M.N., Diaz, J.F.T., Nadlifatin, R., Redi, A.A.N.P.: Determining factors affecting acceptance of e-learning platforms during the covid-19 pandemic: Integrating extended technology acceptance model and delone & mclean is success model. Sustainability (Switzerland). 13, (2021). https://doi.org/10.3390/su13158365
8. Unesa: Pedoman Sidia (Sinau Digital) Unesa. (2024)
9. Alyoussef, I.Y.: E-learning acceptance: the role of task–technology fit as sustainability in higher education. Sustainability (Switzerland). 13, (2021). https://doi.org/10.3390/su13116450
10. Abuhassna, H., Yahaya, N., Zakaria, M.A.Z.M., Zaid, N.M., Samah, N.A., Awae, F., Nee, C.K., Alsharif, A.H.: Trends on Using the Technology Acceptance Model (TAM) for Online Learning: A Bibliometric and Content Analysis. International Journal of Information and Education Technology. 13, 131–142 (2023). https://doi.org/10.18178/ijiet.2023.13.1.1788
11. Roy, S.K.: E-learning Portal Success in higher education organizations: A multi-group comparison. Journal of Social, Humanity, and Education. 3, 197–218 (2023). https://doi.org/10.35912/jshe.v3i3.1294
12. Hair, J.F., Risher, J.J., Sarstedt, M., Ringle, C.M.: When to use and how to report the results of PLS-SEM. European business review. 31, 2–24 (2019). https://doi.org/10.1108/ebr-11-2018-0203
13. Fornell, C., Larcker, D.F.: Evaluating Structural Equation Models with Unobservable Variables and Measurement Error. Journal of Marketing Research. 18, 39–50 (1981). https://doi.org/10.2307/3151312

14. Naveed, Q.N., Alam, M.M., Qahmash, A.I., Quadri, K.M.: Exploring the determinants of service quality of cloud elearning system for active system usage. Applied Sciences (Switzerland). 11, (2021). https://doi.org/10.3390/app11094176
15. Nasir Yakubu, M., Ibrahim Dasuki, S.: Measuring e-learning success in developing countries: applying the updated DeLone and McLean model Assessing ELearning Systems Success in Nigeria: An Application of the DeLone and McLean Information Systems Success Model.